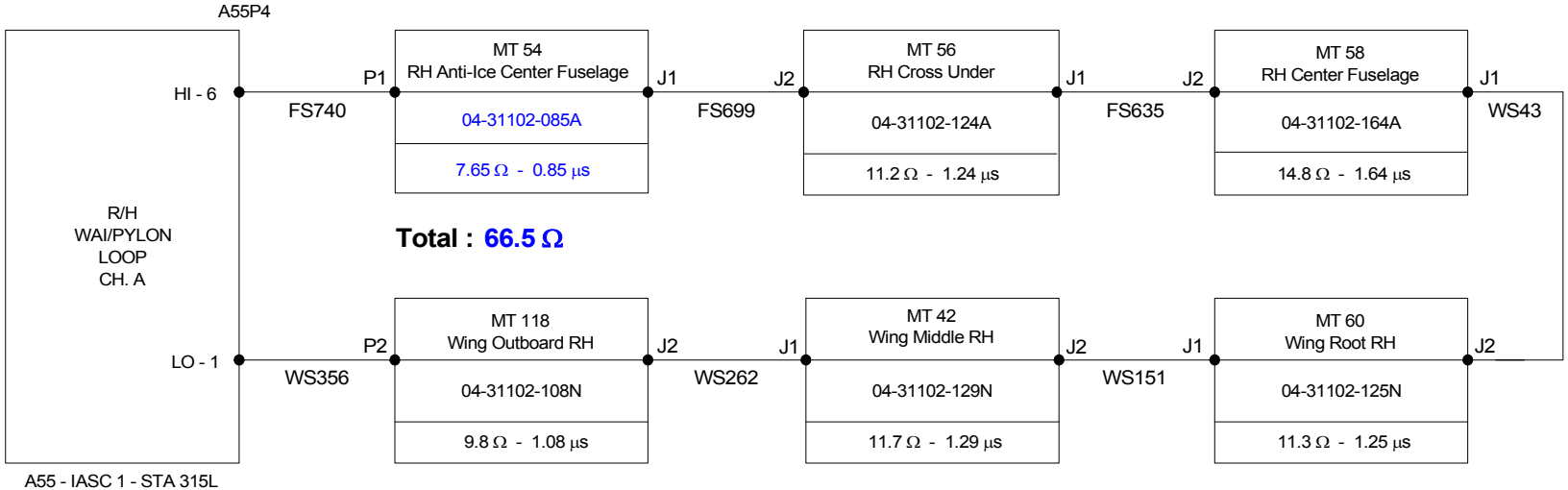

Schematics CH350